AC - 2714P

ELECTRIC POLISHER



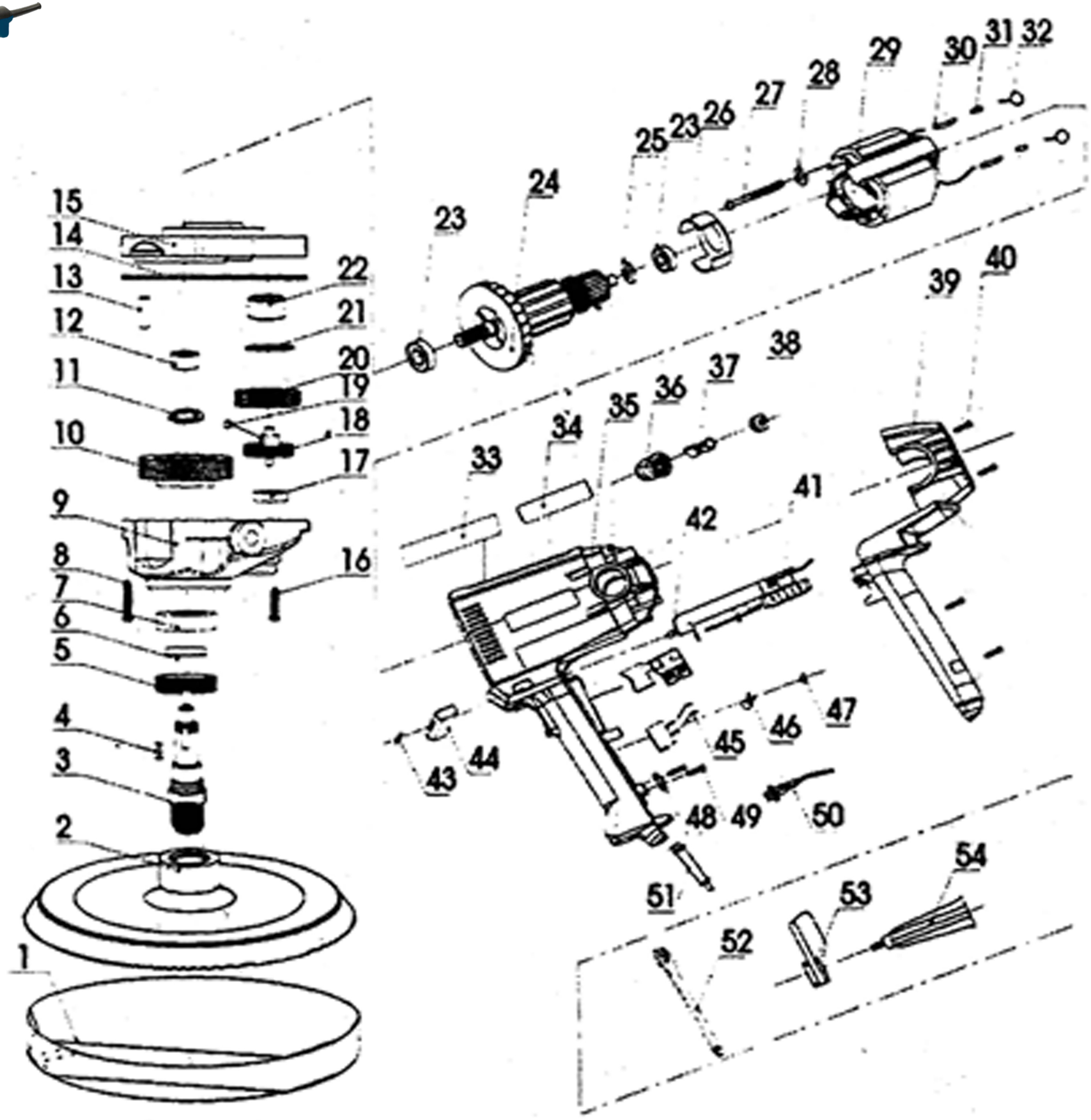

1050 W

AC - 2714P

ELECTRIC POLISHER

No.	ENGLISH NAME
1	Sheep Wool
2	Wool Wheel
3	Spindle
4	Key 4x12
5	Dust Cover
6	Seal Packing Collar
7	Bearing 6201
8	Screw ST 4.8X35
9	Gear box
10	Second level gear
11	Axle Packing Collar
12	Bearing Cover
13	Column 3x8
14	Seal Packing Collar
15	Bearing Cover
16	Screw ST 48X30
17	Bearing 6201
18	Tooth Axis
19	First - Level Gear
20	Steel Ball 4
21	Washer 8
22	Bearing 081410
23	Bearing 6201
24	Rotor
25	Magnetism Link
26	Roller
27	Screw ST45*4.8
28	Washer M5
29	Stator
30	Tube ST3

No.	ENGLISH NAME
31	Tube ST7*3
32	Spring
33	Name Plate
34	Name Plate
35	Housing Assy
36	Brush Holder
37	Carbon Brush
38	Brush Cap
39	Handle (L)
40	Screw ST3.9X14
41	Switch
42	Switch
43	Spring
44	Work Driving Arm
45	Electric Capacity
46	Stop Cover
47	Line Buckle MS
48	Cord Flange
49	Screw ST3.9X14
50	Power Line
51	Cord Cover
52	Spanner
53	Finger Guard
54	Handle